Manual & actuated Valve Manufacturer

CONTENT

1. *Ball Valve (Floating Type)*.....04-07
2. *Ball Valve(Trunnion Type)*.....08-12
3. *Ball Valve (Trunnion Top Entry)*.....13-14
4. *Double Block and Bleed Ball Valve*.....15-20
5. *Gate Valve*.....21-23
6. *Forged Steel Gate Valve*.....24-25
7. *Globe Valve* 26-27
8. *Check Valve*..... 28-29
9. *Plug Valve*.....32-40

BALL VALVES

1. VALVE TYPES& FEATURES

FLOATING BALL VALVE

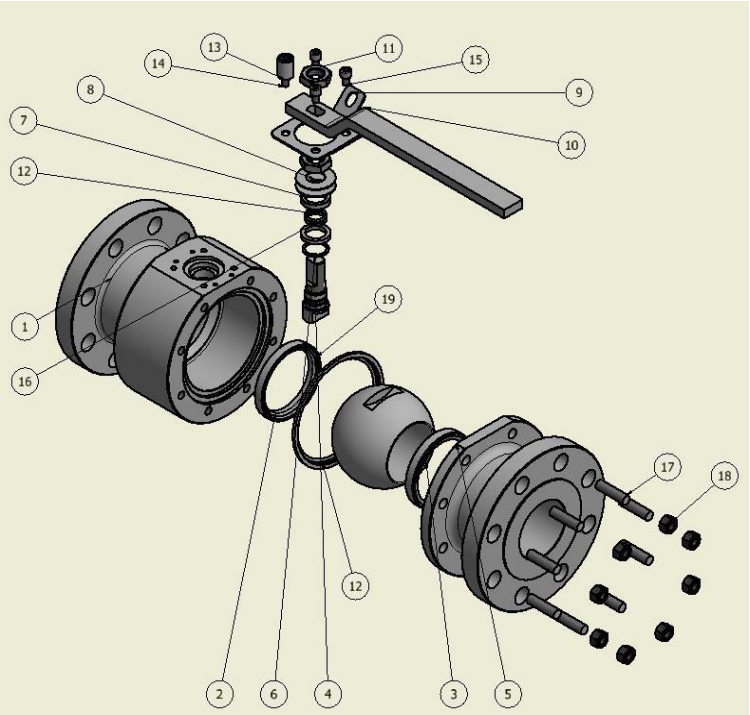

ELEMENT	QTY	DESCRIPTION
1	1	BODY
2	2	SEAT
3	1	BALL
4	1	STEM
5	1	FLANGE
6	1	THRUST BEARING
7	1	PACKING GLAND
8	2	SPRING WASHER
9	1	LOCKING DEVICE
10	1	LEVER
11	2	GLAND NUT
12	3	O-RING
13	1	STOP PIN
14	1	SCREW
15	3	SCREW
16	2	GRAPHITE
17	8	STUD
18	8	NUT
19	1	ANTISTATIC DEVICE

A floating ball valve is a valve with its ball floating (not fixed by a trunnion) inside the valve body; it drifts toward to the downstream side and tightly pushes against the seat under the medium pressure to ensure a reliable seal.

The floating ball valve is a simple design with good sealing performance relying on the seat material to withstand the workload as the seat ring bars the sealing pressure. Floating ball valves are mainly used in low to mid-level pressure

APJ ENERGY

Material Data of Floating Forged Steel Ball Valve

APPLICABLE STANDARDS:

STEEL BALL VALVES, API 608/API 6D
STEEL BALL VALVES, ISO 10434/IISO 14313
FIRE STATIC, API607
ANTI STATIC, API 608
STEEL VALVES, ASME B16.34
FACETOFACE,ASMEB16.10
END FLANGES, ASME B16.5
BURRWELDING ENDS, ASME B16.25
INSPECTION AND TEST, API 598/API 6D

DESIGN DESCRIPTION

FULL PORT DESIGN
BB, BOLTED BONNET, SPLIT BODY
FLOATING BALL TYPE
BLOW-OUT PROOF STEM
FIRE DURABLE CONSTRUCTION
ANTI STATIC DEVICE
STOPPER DEVICE
ISO 5211 MOUNTING PAD
FLANGED OR BUTTWELDING ENDS AVAILABLE WITH WG OPERATOR

Materials of parts

No.	Part Name	ASTM Material		
		Carbon Steel	18 Cr-9Ni-2Mo	Carbon Steel
1	Body	A105	A351-CF8M	A352-LCB
2	Bonnet	A105	A351-CF8M	A352-LBC
3	Ball	ASTM A182 F316[1)]	A182-F316	A182-F304[1)]
4	Stem	ASTM A182 F316	A276-316	A276-304
5	Seat Ring	.PTFE		
6	Bonnet Gasket	Graphite +304[2)]	PTFE	Graphite+304[2)]
7	Bonnet Stud	A193-B7	A193-B8	A320-L7
8	Bonnet Stud Nut	A194-2H	A194-8	A194-4
9	Packing	PTFE/Graphite		
10	Gland	A105/A182-F316	A182-F316	A350-LF2
11	Gland Bolt	A193-B7	A193-B8	A193-B7
12	Stop Plate	Carbon Steel	Carbon Steel + Zn	Carbon steel
13	Handle	Carbon Steel		

Note:
1) A105+ENPoptional
2) Spiral woundconstruction

APJ ENERGY

FLOATING DIMENSIONS

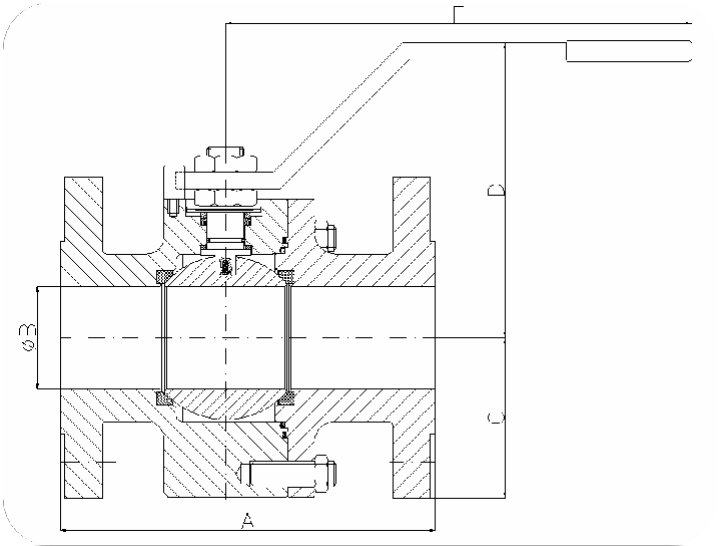

150# CLASS

SIZE	FACE TO FACE (A)			Ø BORE (B)	C	D	F
NPS(Inch.)/DN(mm)	RF	RTJ	BW	mm	mm	mm	mm
1/2" / 15	108	/	140	13	45	72	161
3/4" / 20	117	/	152	19	50	84	185
1" / 25	127	140	165	25	55	89	185
1,1/4" / 32	140	/	178	32	57,5	103	276
1,1/2" / 40	165	178	190	38	62,5	135	276
2" / 50	178	191	216	49	75	141	276
3" / 80	203	216	282	74	95	146	360
4" / 100	229	241	305	100	115	217	500
6" / 150	394	406	457	150	140	253	750
8" / 200	457	470	521	201	172,5	GEAR	GEAR

300# CLASS

SIZE	FACE TO FACE (A)			Ø BORE (B)	C	D	F
NPS(Inch.)/DN(mm)	RF	RTJ	BW	mm	mm	mm	mm
1/2" / 15	140	151	140	13	47,5	72	161
3/4" / 20	152	165	152	19	57,5	84	185
1" / 25	165	178	165	25	62,5	89	185
1,1/4" / 32	178	/	178	32	67,5	103	276
1,1/2" / 40	190	203	190	38	77,5	135	276
2" / 50	216	232	216	49	82,5	141	276
3" / 80	282	298	282	76	105	146	360
4" / 100	305	321	305	100	127,5	217	500
6" / 150	403	419	457	150	160	GEAR	GEAR
8" / 200	502	518	521	201	190	GEAR	GEAR

APJ ENERGY

600# CLASS

SIZE	FACE TO FACE (A)			Ø BORE (B)	C	D	F
NPS(Inch.)/DN(mm)	RF	RTJ	BW	mm	mm	mm	mm
1/2" / 15	165	163,5	165	13	47,5	72	161
3/4" / 20	190,5	190,5	190,5	19	57,5	84	185
1" / 25	216	216	216	25	62,5	89	185
1,1/4" / 32	229	229	229	32	67,5	103	276
1,1/2" / 40	241	241	241	38	77,5	135	276
2" / 50	292	295	292	49	82,5	144	276
3" / 80	356	359	356	76	105	145	360
4" / 100	432	435	432	100	137,5	246	700

900# CLASS

SIZE	FACE TO FACE (A)			Ø BORE (B)	C	D	F
NPS(Inch.)/DN(mm)	RF	RTJ	BW	mm	mm	mm	mm
1/2" / 15	216	216	216	13	60	79	185
3/4" / 20	229	229	229	19	65	140	205
1" / 25	254	254	254	25	75	135	276
1,1/4" / 32	279	279	279	32	80	130	365
1,1/2" / 40	305	305	305	38	90	135	365
2" / 50	368	371	368	49	107,5	161	578
3" / 80	381	384	381	76	120	GEAR	GEAR

1500# CLASS

SIZE	FACE TO FACE (A)			Ø BORE (B)	C	D	F
NPS(Inch.)/DN(mm)	RF	RTJ	BW	mm	mm	mm	mm
1/2" / 15	216	216	216	13	60	79	185
3/4" / 20	229	229	229	19	65	140	205
1" / 25	254	254	254	25	75	135	276
1,1/4" / 32	279	279	279	32	80	130	365
1,1/2" / 40	305	305	305	38	90	135	365
2" / 50	368	371	368	49	107,5	161	578
3" / 80	470	473	470	76	108	GEAR	GEAR

2500# CLASS

SIZE	FACE TO FACE (A)			Ø BORE (B)	C	D	F
NPS(Inch.)/DN(mm)	RF	RTJ	BW	mm	mm	mm	mm
1/2" / 15	264	264	264	13	67,5	116	276
3/4" / 20	273	273	273	19	70	100	400
1" / 25	308	308	308	25	80	162	500
1,1/2" / 40	387	387	387	38	102,5	176	650

TRUNNION SIDE ENTRY BALL VALVE

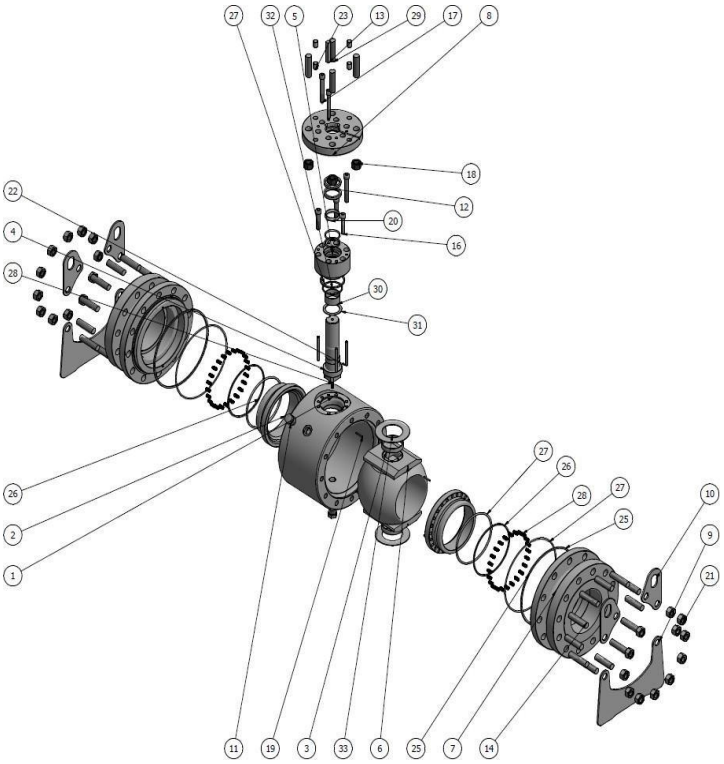

ELEMENT	QTY	DESCRIPTION
1	1	BODY
2	2	SEAT
3	1	BALL
4	1	STEM
5	1	BONNET
6	2	SPACER
7	2	FLANGE
8	1	COVER PLATE
9	2	SUPPORT
10	4	LIFTING LUG
11	2	PLUG
12	1	PACKING GLAND
13	1	KEY
14	12	STUD
15	12	STUD
16	3	SCREW
17	3	SCREW
18	4	NUT
19	4	PIN
20	1	BEARING
21	24	NUT
22	4	PIN
23	4	PIN
24	1	GRAPHITE SWT
25	2	SWT GASKET
26	2	GRAPHITE
27	7	O-RING
28	49	SPRING
29	4	STUD
30	1	EARING
31	1	THRUST BEARING
32	1	SWT GASKET
33	2	BEARING
34	2	THRUST BEARING

The ball on a trunnion ball valve does not move with medium pressure.
Trunnion ball valves have floating seats. This valve uses pressure-actuated seats with locked-in non-metallic face seals.
To assure tight sealing at low pressures, special springs force the seats against the ball. At the higher pressures, the upstream seat is forced against the ball by the pressure working across the differential between the area of the seat insert and the seat O-Ring. The higher is the pressure, the more the seal pushes.

Material Data of Trunnion Mounted Forged Steel Ball Valve

Applicable standards:
STEEL BALL VALVES, API 608/API 6D
STEEL BALL VALVES, ISO 14313
FIRE STATIC, API607
ANTI STATIC, API 608
STEEL VALVES, ASME B16.34
FACETOFACE,ASMEB16.10
END FLANGES, ASME B16.5
BUTTWELDING ENDS, ASME B16.25
INSPECTION AND TEST, API 598/API 6D

DESIGN DESCRIPTION
FULL PORT DESIGN
BB, BOLTED BONNET, SPLIT BODY
THREE PIECE BODY FOR 12 & ABOVE
TRUNNION MOUNTED BALL TYPE
BLOW-OUT PROOF STEM
ANTI STATIC DEVICE
STOPPER DEVICE
ISO 5211 MOUNTING PAD
FLANGED OR BUTTWELDING ENDS*AVAILABLE WITH WG OPERATOR*

Materials of parts

No	Part Name	ASTM Material		
		CarbonSteel	18Cr-9Ni-2Mo	CarbonSteel
1	Body	A105	A182-F316	A350-LF2
2	Bonnet	A 105	A182-F316	A350-LF2
3	Ball	A182-F304 "	A182-F316	A182-F304' '
4	Stem	A 276-304	A 276-316	A276-304
5	Seat	A105 +EN P	A182-F316	A350- LF2+ ENP
6	Seat Insert	Glass Filled PTFE		
7	S eat Spring	A313-304	Inconel X-750	A313-304
8	Seat O - Ring	NBR	Viton	Viton
9	Stem O-Ring	NBR	Viton	Viton
10	Bonnet Gasket	Graphite +304"	Graphite+316"	Graphite+ 304"
11	Bonnet O-Ring	NBR	Viton	Viton
12	Antistatic Spring	A313-304	A313-316	A313-304
13	G rounding Plunger	A182-F304	A182-F316	A182-F304
14	Bon net Stud	A193-B7	A1 93-B8	A 320-L7
15	Bon net Stud Nut	A1 94-2H	A194-8	A194-4
16	Trunnion	A 276-304	A 276-316	A276-304
17	Trunnion Bea ring	304 +PTFF	316+ PTFE	3 04+ PTFE
18	Gland	A105	A182-F316	A350-LF2
1 9	GI and Bolt	A193-B7	A1 93-B8	A193-87
20	Stop Plate	Carbon Steel	Carbon Steel +Zn	Carbon Steel
21	Handle	Carbon Steel		

Note:1)A105+ENPOptional.
2) Spiral wound construction.

TRUNNION DIMENSIONS

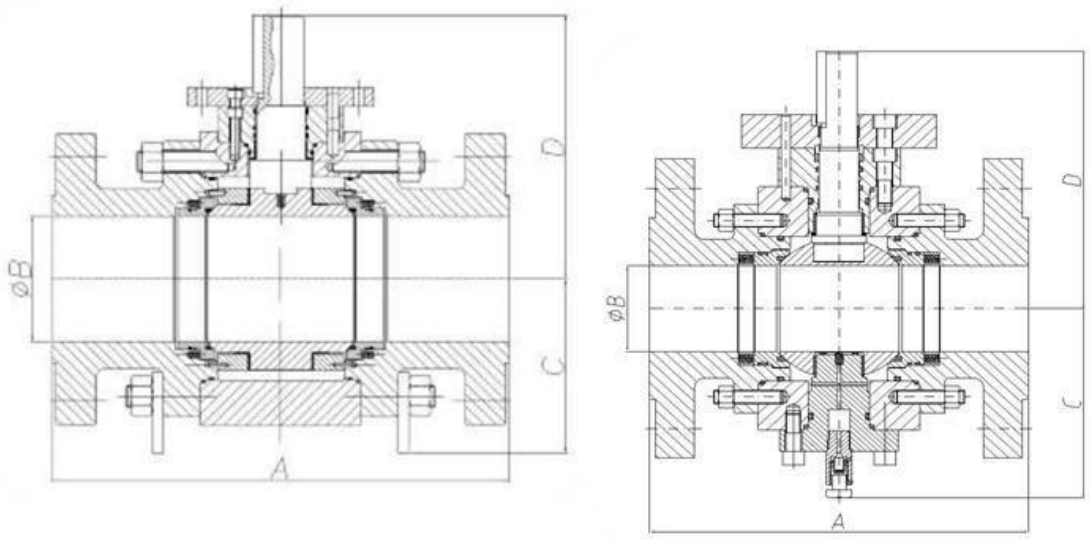

150# CLASS

SIZE	FACE TO FACE (A)			Ø BORE (B)	C	D
NPS(Inch.)/DN(mm)	RF	RTJ	BW	mm	mm	mm
2" / 50	178	191	216	51	135	165
3" / 80	203	216	283	76	137	208
4" / 100	229	241	305	102	178	249
6" / 150	394	406	457	152	234	308
8" / 200	457	470	521	203	280	350
10" / 250	533	546	559	254	345	385
12" / 300	610	622	635	305	365	425
14" / 350	686	699	762	337	418	508
16" / 400	762	775	838	387	460	550
18" / 450	864	876	914	438	500	591
20" / 500	914	927	991	489	520	614
24" / 600	1067	1080	1143	591	643	757
26" / 650	1143	/	1245	633	675	650
28" / 700	1245	/	1346	686	760	829
30" / 750	1295	/	1397	736	775	882

300# CLASS

SIZE	FACE TO FACE (A)			Ø BORE (B)	C	D
NPS(Inch.)/DN(mm)	RF	RTJ	BW	mm	mm	mm
2" / 50	216	232	216	51	122	165
3" / 80	283	298	283	76	138	231
4" / 100	305	321	305	102	168	250
6" / 150	403	419	403	152	250	311
8" / 200	502	518	521	203	280	350
10" / 250	568	584	559	254	330	419
12" / 300	648	664	635	305	405	457
14" / 350	762	778	762	337	438	513
16" / 400	838	854	838	387	460	557
18" / 450	914	930	914	438	510	629
20" / 500	991	1010	991	489	540	693
24" / 600	1143	1165	1143	591	690	772
26" / 650	1245	1270	1245	633	650	650
28" / 700	1346	1372	1346	680	725	680
30" / 750	1397	1422	1397	736	755	705

600# CLASS

SIZE	FACE TO FACE(A)			Ø BORE (B)	C	D
NPS(Inch.)/DN(mm)	RF	RTJ	BW	mm	mm	mm
2" / 50	292	295	292	51	124	165
3" / 80	356	359	356	76	145	229
4" / 100	432	435	432	102	188	275
6" / 150	559	562	559	152	260	315
8" / 200	660	664	660	203	315	387
10" / 250	787	791	787	254	345	430
12" / 300	838	841	838	305	420	492
14" / 350	889	892	889	337	468	526
16" / 400	991	994	991	387	500	592
18" / 450	1092	1095	1092	438	530	658
20" / 500	1194	1200	1194	489	573	772
24" / 600	1397	1407	1397	591	756	819
26" / 650	1448	1461	1448	633	803	887
28" / 700	1549	1562	1549	686	770	918
30" / 750	1651	1664	1651	736	780	939

900# CLASS

SIZE	FACE TO FACE(A)			Ø BORE (B)	C	D
NPS(Inch.)/DN(mm)	RF	RTJ	BW	mm	mm	mm
2" / 50	368	371	368	51	150	197
3" /80	381	384	381	76	160	230
4" / 100	457	460	457	102	210	265
6" / 150	610	613	610	152	314	347
8" / 200	737	740	737	203	325	428
10" / 250	838	841	838	254	380	466
12" / 300	965	968	965	305	423	536
14" / 350	1029	1038	1029	324	480	542
16" / 400	1130	1140	1130	373	530	629
18" / 450	1219	1232	1219	423	615	727
20" / 500	1321	1334	1321	471	650	790
24" / 600	1549	1568	1549	570	700	900

APJ ENERGY

1500# CLASS

SIZE	FACE TO FACE(A)			Ø BORE (B)	C	D
NPS(Inch.)/DN(mm)	RF	RTJ	BW	mm	mm	mm
2" / 50	368	371	368	51	150	197
3" /80	470	473	470	76	170	231
4" / 100	546	549	546	102	220	285
6" / 150	705	711	705	146	323	396
8" / 200	832	841	832	194	360	490
10" / 250	991	1000	991	254	445	542
12" / 300	1130	1146	1130	289	470	594
14" / 350	1257	1276	1257	317	530	656
16" / 400	1384	1407	1384	362	682	738

2500# CLASS

SIZE	FACE TO FACE(A)			Ø BORE (B)	C	D
NPS(Inch.)/DN(mm)	RF	RTJ	BW	mm	mm	mm
2" / 50	451	454	451	42	175	263
3" / 80	578	584	578	63,5	205	340
4" / 100	673	683	673	88,5	255	362
6" / 150	914	927	914	134	377	481
8" / 200	1022	1038	1022	180	400	542
10" / 250	1270	1292	1270	225	480	697
12" / 300	1422	1445	1422	265	600	784

APJ ENERGY

TRUNNION TOP ENTRY BALL VALVE

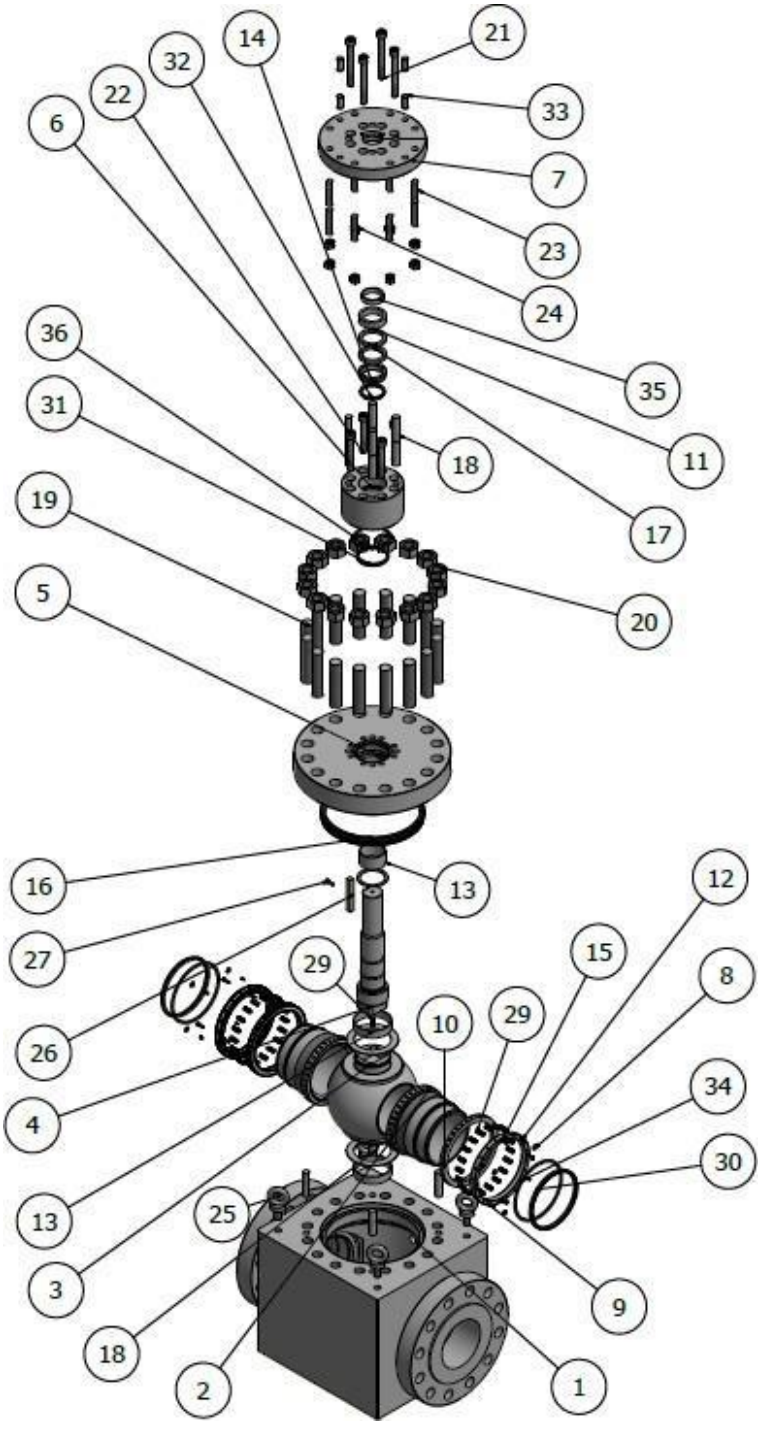

ELEMENT	QTÀ	DESCRIPTION
1	1	BODY
2	2	SEAT
3	1	BALL
4	1	STEM
5	1	BONNET
6	1	GLAND FLANGE
7	1	COVER PLATE
8	8	RING
9	5	SPRING RING
10	5	THREADED RING NUT
11	1	PACKING GLAND
12	8	SCREW
13	6	BEARING
14	1	LIP SEAL RING
15	8	SHOULDER SCREW WITH GROUND SHAFT
16	1	BONNET GASKET
17	2	GRAPHITE
18	12	PIN
19	16	STUD
20	16	NUT
21	4	SCREW
22	4	SCREW
23	8	STUD
24	8	NUT
25	4	LIFTING EYEBOLT
26	1	KEY
27	1	SCREW
28	2	PLUG
29	41	SPRING
30	2	LIP SEAL
31	1	LIP SEAL
32	1	LIP SEAL
33	4	PIN
34	2	GRAPHITE
35	1	BEARING
36	1	GLAND FLANGE GASKET

Trunnion Top Entry Ball Valves add, to the main features of Side Entry Type, the possibility to make maintenance without removing the valve from the pipeline. In this valve model, all the internals can be easily dismounted by loosening the bonnet of the valve and removing the ball, the seat-holders and the shaft. When re-mounting the valve, the seat-holders have a system to regulate the compression of these against the ball.

APJ ENERGY

150#-300#-600# CLASS

SIZE	FACE TO FACE(A)			Ø BORE (B)	C	D
NPS(Inch.)/DN(mm)	RF	RTJ	BW	mm	mm	mm
2" / 50	292	295	292	51	115	208
3" /80	356	359	356	76	157	264
4" / 100	432	435	432	102	142	342
6" / 150	559	562	559	152	215	364
8" / 200	660	664	660	203	270	412
10" / 250	787	791	787	254	302	450
12" / 300	838	841	838	305	356	559
16" / 400	991	994	991	387	380	683

900# CLASS

SIZE	FACE TO FACE(A)			Ø BORE (B)	C	D
NPS(Inch.)/DN(mm)	RF	RTJ	BW	mm	mm	mm
2" / 50	368	371	368	51	135	206
3" /80	381	384	381	76	157	264
4" / 100	457	460	457	102	142	312
6" / 150	610	613	610	152	201	495
8" / 200	737	740	737	203	235	584
10" / 250	838	841	838	254	332	481
12" / 300	965	968	965	305	320	715

1500# CLASS

SIZE	FACE TO FACE(A)			Ø BORE (B)	C	D
NPS(Inch.)/DN(mm)	RF	RTJ	BW	mm	mm	mm
2" / 50	368	371	368	51	135	206
3" /80	470	473	470	76	157	264
4" / 100	546	549	546	102	207	333
6" / 150	705	711	705	146	216	534
8" / 200	832	841	832	194	303	560
10" / 250	991	1000	991	241	300	597
12" / 300	1130	1146	1130	289	360	795

2500# CLASS

SIZE	FACE TO FACE(A)			Ø BORE (B)	C	D
NPS(Inch.)/DN(mm)	RF	RTJ	BW	mm	mm	mm
2" / 50	451	454	451	42	160	315
3" /80	578	584	578	63,5	193	383
4" / 100	673	683	673	88,5	190	443
6" / 150	914	927	914	134	235	535
8" / 200	1022	1038	1022	180	285	628
10" / 250	1270	1292	1270	225	390	863
12" / 300	1422	1445	1422	265	395	895

DOUBLE BLOCK AND BLEED BALL VALVE (TWIN BALL)

FLOATING TYPE

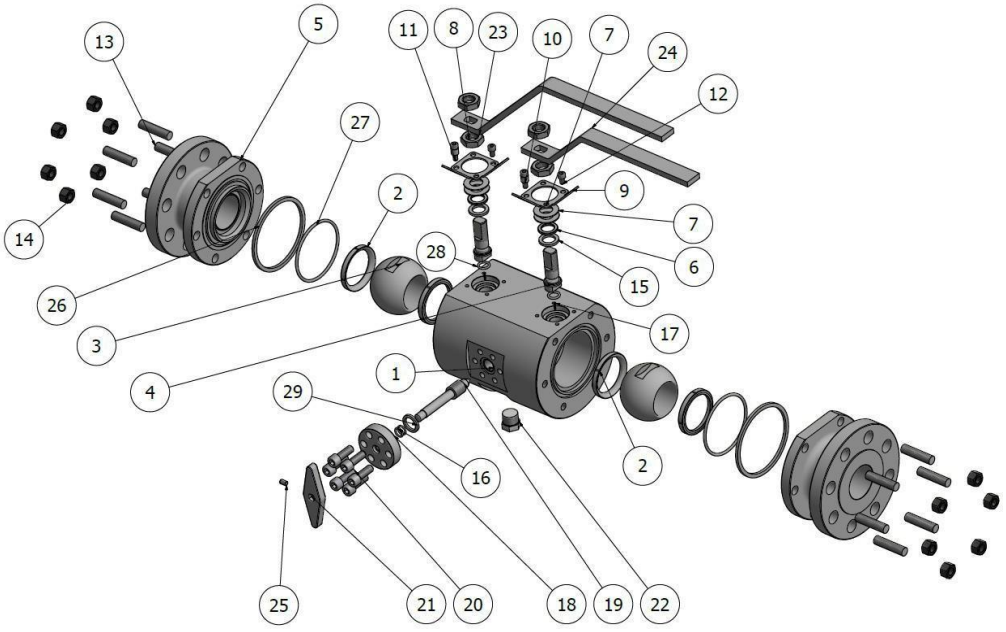

ELEMENT	QTÀ	DESCRIPTION	E	EMENT	QTÀ	DESCRIPTION
1	1	BODY		16	2	O-RING
2	4	SEAT		17	2	ANTISTATIC DEVICE
3	2	BALL		18	1	NEEDLE BONNET
4	2	STEM		19	1	NEEDLE STEM
5	2	FLANGE		20	6	SCREW
6	2	PACKING GLAND		21	1	NEEDLE LEVER
7	4	SPRING WASHER		22	1	PLUG
8	4	NUT		23	1	LEVER
9	2	LOCKING DEVICE		24	1	LEVER
10	2	STOP PIN		25	1	THREADED PIN
11	2	SCREW		26	2	SWT GASKET
12	2	SCREW		27	2	O-RING
13	12	STUD		28	2	O-RING
14	12	NUT		29	1	GRAPHITE SWT

Double block and Bleed Valves are a combination of two balls (twin) in the body, usually with a needle valve to vent the body cavity between the two balls. Valve design can be either Floating or Trunnion Type.

NEEDLE VALVE SECTION

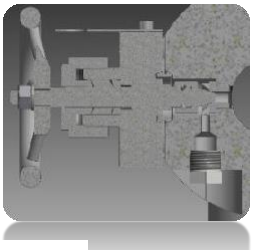

TRUNNION TYPE

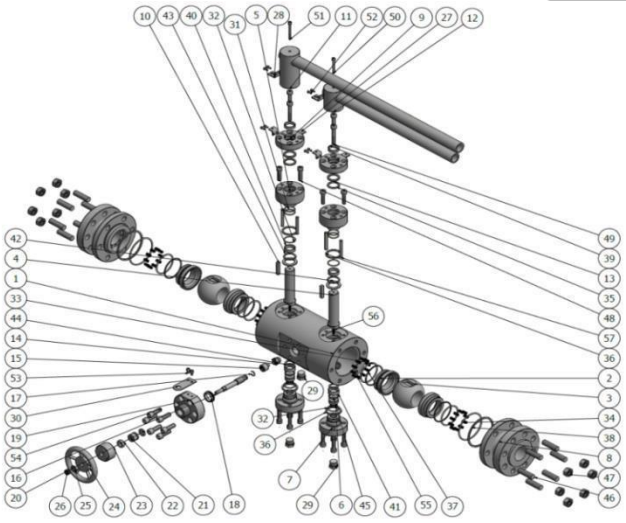

ELEMENT	QTY	DESCRIPTION
1	1	BODY
2	4	SEAT
3	2	BALL
4	2	STEM
5	2	OPERATOR FLANGE
6	2	TRUNNION
7	2	TRUNNION
8	2	FLANGE
9	2	COVER PLATE
10	2	KEY
11	1	LEVER
12	1	LEVER
13	2	PACKING GLAND
14	1	NEEDLE SEAT
15	1	NEEDLE DISC
16	1	NEEDLE STEM
17	1	CIRCLIP
18	1	RING
19	1	NEEDLE BONNET
20	1	WASHER
21	1	PACKING SEAL
22	1	WASHER
23	1	CLAMPING NUT
24	1	HANDWHEEL
25	1	RING

ELEMENT	QTY	DESCRIPTION
26	1	NUT
27	4	LOCKING DEVICE
28	2	LOCKING DEVICE
29	3	TAPPO/PLUG
30	1	NEEDLE LOCKING DEVICE
31	4	O-RING
32	4	O-RING
33	4	O-RING
34	2	O-RING
35	2	GRAPHITE
36	4	SWT GASKET
37	4	GRAPHITE
38	2	SWT GASKET
39	2	BOCCOLA/BEARING
40	2	BOCCOLA/BEARING
41	2	BOCCOLA/BEARING
42	2	THRUST BEARING
43	2	THRUST BEARING
44	2	THRUST BEARING
45	2	DUP RING
46	12	STUD
47	12	NUT
48	12	SCREW
49	4	SCREW
50	1	SCREW
51	1	SCREW
52	12	SCREW
53	2	SCREW
54	6	SCREW
55	40	SPRING
56	2	ANTISTATIC DEVICE
57	4	IN

FLOATING DIMENSIONS

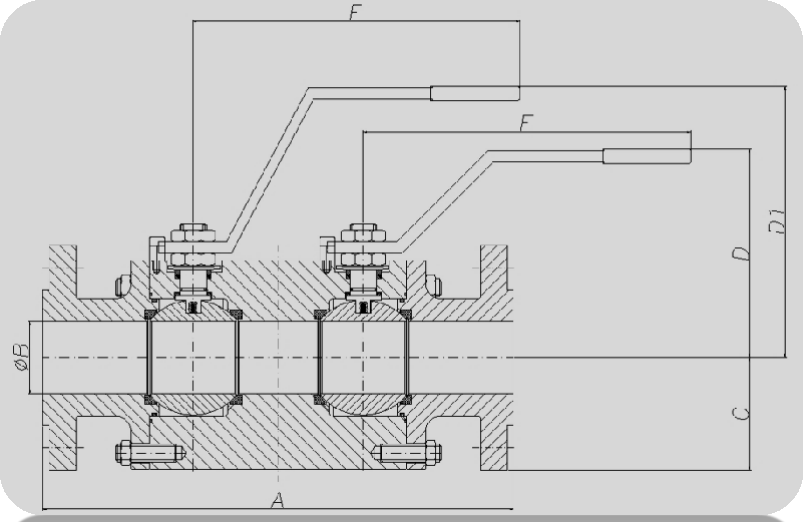

150# CLASS

SIZE	FACE TO FACE (A)	Ø BORE (B)	C	D	D1	F
NPS(Inch.)/DN(mm)	RF/RTJ/BW	mm	mm	mm	mm	mm
1/2" / 15	250	13	45	140	190	276
3/4" / 20	265	19	50	140	190	276
1" / 25	280	25	55	144	190	276
1,1/2" / 40	305	38	62,5	130	170	360
2" / 50	340	49	75	148	207	360
3" / 80	390	74	95	150	190	360
4" / 100	440	100	115	217	300	450

300# CLASS

SIZE	FACE TO FACE (A)	Ø BORE (B)	C	D	D1	F
NPS(Inch.)/DN(mm)	RF/RTJ/BW	mm	mm	mm	mm	mm
1/2" / 15	250	13	47,5	140	190	276
3/4" / 20	265	19	57,5	140	190	276
1" / 25	280	25	62,5	144	154	360
1,1/2" / 40	350	38	77,5	130	170	360
2" / 50	340	49	82,5	148	207	360
3" / 80	400	76	105	150	190	360
4" / 100	465	100	127,5	217	300	700

APJ ENERGY

600# CLASS

SIZE	FACE TO FACE (A)	Ø BORE (B)	C	D	D1	F
NPS(Inch.)/DN(mm)	RF/RTJ/BW	mm	mm	mm	mm	mm
1/2" / 15	260	13	47,5	140	190	276
3/4" / 20	280	19	57,5	140	190	276
1" / 25	300	25	62,5	144	194	276
1,1/2" / 40	350	38	77,5	130	170	450
2" / 50	340	49	82,5	148	207	360
3" / 80	462	76	105	150	190	360

900# CLASS

SIZE	FACE TO FACE (A)	Ø BORE (B)	C	D	D1	F
NPS(Inch.)/DN(mm)	RF/RTJ/BW	mm	mm	mm	mm	mm
1/2" / 15	300	13	60	140	190	276
3/4" / 20	310	19	65	114	154	276
1" / 25	325	25	75	144	194	276
1,1/2" / 40	405	38	90	177	227	450
2" / 50	410	49	107,5	200	279	450

1500# CLASS

SIZE	FACE TO FACE (A)	Ø BORE (B)	C	D	D1	F
NPS(Inch.)/DN(mm)	RF/RTJ/BW	mm	mm	mm	mm	mm
1/2" / 15	300	13	60	140	190	276
3/4" / 20	310	19	65	114	154	276
1" / 25	325	25	75	144	194	276
1,1/2" / 40	405	38	90	177	227	450
2" / 50	410	49	107,5	200	279	450

2500# CLASS

SIZE	FACE TO FACE (A)	Ø BORE (B)	C	D	D1	F
NPS(Inch.)/DN(mm)	RF/RTJ/BW	mm	mm	mm	mm	mm
1/2" / 15	300	13	67,5	140	190	276
3/4" / 20	310	19	70	182	242	360
1" / 25	325	25	80	198	255	450

APJ ENERGY

TRUNNION DIMENSIONS

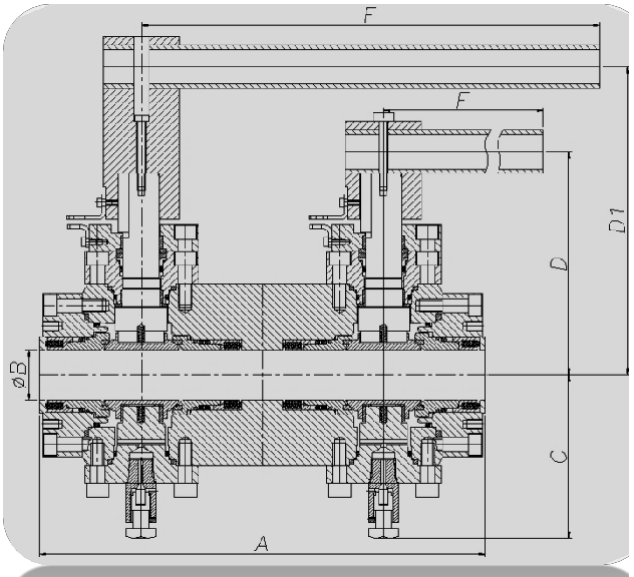

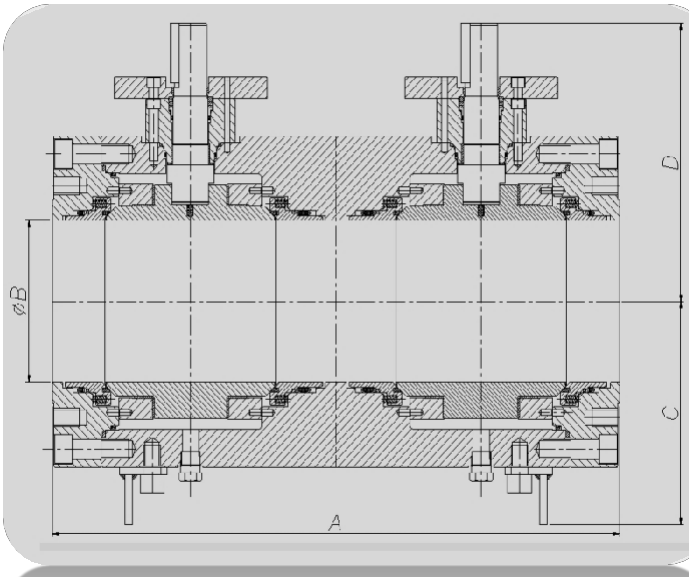

150# CLASS

SIZE	FACE TO FACE (A)	Ø BORE (B)	C	D	D1	F
NPS(Inch.)/DN(mm)	RF/RTJ/BW	mm	mm	mm	mm	mm
2" / 50	454	51	135	182	252	430
3" / 80	473	76	163	250	330	700
4" / 100	551	102	177	237	/	GEAR
6" / 150	605	152	277	315	/	GEAR
8" / 200	778	203	280	350	/	GEAR
10" / 250	914	254	345	384	/	GEAR

300# CLASS

SIZE	FACE TO FACE (A)	Ø BORE (B)	C	D	D1	F
NPS(Inch.)/DN(mm)	RF/RTJ/BW	mm	mm	mm	mm	mm
2" / 50	454	51	135	182	252	430
3" / 80	459	76	159	207	/	GEAR
4" / 100	435	102	229	284	/	GEAR
6" / 150	720	152	270	300	/	GEAR
8" / 200	778	203	280	350	/	GEAR
10" / 250	972	254	330	419	/	GEAR

APJ ENERGY

600# CLASS

SIZE	FACE TO FACE (A)	Ø BORE (B)	C	D	D1	F
NPS(Inch.)/DN(mm)	RF/RTJ/BW	mm	mm	mm	mm	mm
2" / 50	472	51	135	164	/	GEAR
3" / 80	627	76	210	220	/	GEAR
4" / 100	679	102	273	270	/	GEAR
6" / 150	877	152	356	320	/	GEAR
8" / 200	1020	203	419	387	/	GEAR

900# CLASS

SIZE	FACE TO FACE (A)	Ø BORE (B)	C	D	D1	F
NPS(Inch.)/DN(mm)	RF/RTJ/BW	mm	mm	mm	mm	mm
2" / 50	584	51	216	146	/	GEAR
3" / 80	647	76	241	218	/	GEAR
4" / 100	747	102	292	280	/	GEAR
6" / 150	772	152	313	347	/	GEAR
8" / 200	1096	203	470	420	/	GEAR

1500# CLASS

SIZE	FACE TO FACE (A)	Ø BORE (B)	C	D	D1	F
NPS(Inch.)/DN(mm)	RF/RTJ/BW	mm	mm	mm	mm	mm
2" / 50	584	51	216	146	/	GEAR
3" / 80	660	76	267	224	/	GEAR
4" / 100	787	102	311	240	/	GEAR
6" / 150	924	152	381	355	/	GEAR
8" / 200	1207	203	483	482	/	GEAR

2500# CLASS

SIZE	FACE TO FACE (A)	Ø BORE (B)	C	D	D1	F
NPS(Inch.)/DN(mm)	RF/RTJ/BW	mm	mm	mm	mm	mm
2" / 50	454	51	140	238	/	GEAR
3" / 80	850	76	171	271	/	GEAR
4" / 100	1250	102	245	362	/	GEAR
6" / 150	1350	152	365	481	/	GEAR
8" / 200	1530	203	450	542	/	GEAR

GATE VALVES

Design Construction: API 600
Classes: 150-300-600-900 and 1500 lbs

Testing according to API 598
Marking to MSS SP25

Outside Screw and Yoke (OS&Y)

Self aligning packing gland in two parts
Screwed back seat
Welded seat rings
Integral flexible wedge

Flanges according to ASME B16.5
Butt Welding Ends according to ASME B16.25

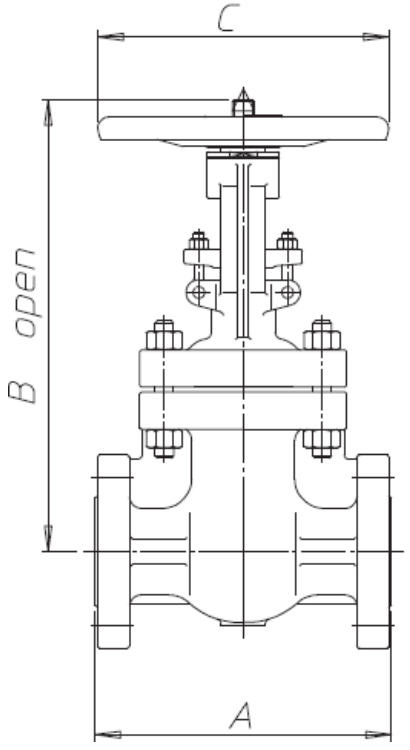

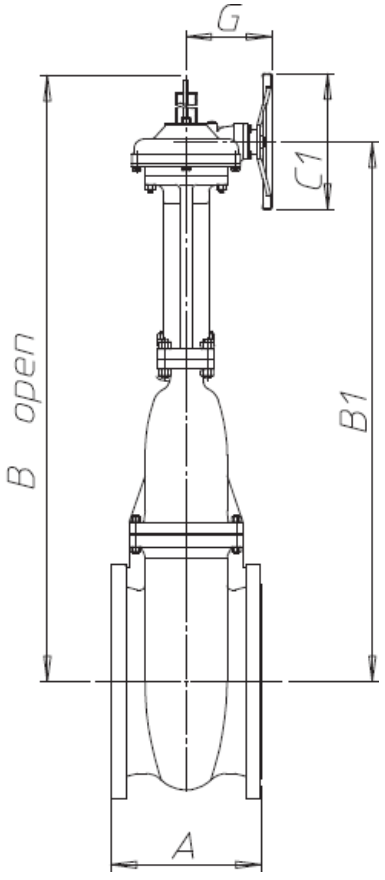

APJ ENERGY

STANDARD MATERIAL FOR BOLTED BONNET GATE VALVES

POS.	PART NAME		MATERIAL			
			WCB-13%Cr Trim 8	LCC-13%Cr Trim 8	WC6-13%Cr Trim 8	CF8M-F316 Trim 12
1	- BODY		ASTM A216 WCB	ASTM A352 LCC	ASTM A217 WC6	ASTM A351 CF3
2	- SEAT RING		ASTM A182 F6a	A350 LF2 HF	ASTM A217 WC6	ASTM A351 CF3
3	- WEDGE		ASTM A182 F6a	A352 LCC+13% Cr	A217 WC6+13% Cr	ASTM A351 CF3
4	- STEM		ASTM A182 F6			ASTM A182 F316
5	- B/B BOLTS		ASTM A193 B7	ASTM A320 L7	ASTM A193 B16	ASTM A193 B8
6	- NUTS FOR BOLTS		ASTM A194 2H	ASTM A194 Gr.7	ASTM A194 Gr.4	ASTM A194 Gr.8
7	- B/B GASKET	cl. 150	Corrugated S.S. Graphite			
		cl. 300	Spiral Wound Graphite			
		cl. 600	Soft Iron	ASTM A182 F316		
8	- BONNET		ASTM A216 WCB	ASTM A352 LCC	ASTM A217 WC6	ASTM A351 CF3
9	- BACK SEAT		ASTM A182 F6			ASTM A182 F316
10	- PACKING		Braided & Flexible Graphite			
11	- PIN FOR EYE BOLTS		ASTM A105			ASTM A182 F316
12	- GLAND STUDS		ASTM A193 B7			ASTM A193 B8
13	- PACKING GLAND		ASTM A182 F6			ASTM A182 F316
14	- GLAND FLANGE		ASTM A216 WCB			ASTM A351 CF3
15	- EYE BOLT NUT		ASTM A194 2H			ASTM A194 Gr.8
16	I - GREASE FITTING		CARBON STEEL			
17	- YOKE SLEEVE		ASTM A439 D2			
18	- THRUST RING		ASTM A105			ASTM A182 F316

NOTE:

1 - Thrust ball bearing for 8" and larger only.
2 - Yoke for 12" and larger only.

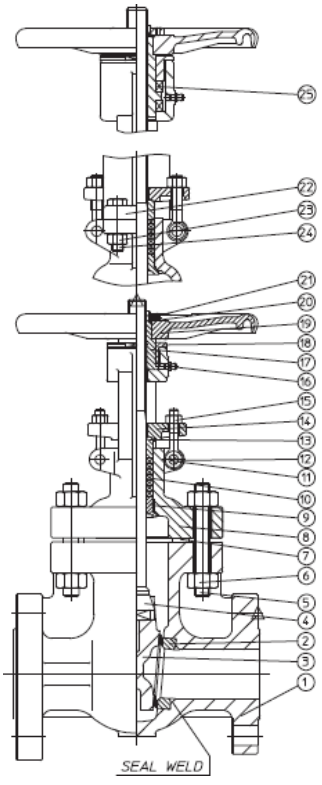

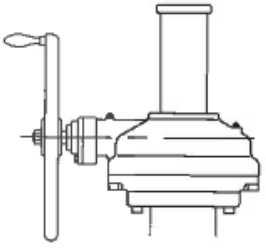

Gear Operated

APJ ENERGY

GATE VALVES CLASS 150

SIZE		2"	2 1/2"	3"	4"	5"	6"	8"	10"	12"	14"	16"	18"	20"	24"
A (RF)		178	190	203	229	254	267	292	330	356	381	406	432	457	508
A (BW)		216	241	282	305	381	403	419	457	502	572	610	660	711	813
A (RTJ)		190	203	216	241	267	279	305	343	368	394	419	444	470	521
B (Open)		423	495	520	596	711	759	995	1180	1432	1535	1811	2009	2230	2641
C		200	200	250	250	250	300	350	400	500	500	600	650	650	750
G		-	-	-	-	-	-	-	220	220	360	360	360	411	411
B1		-	-	-	-	-	-	-	1289	1509	1614	1840	2012	2180	2560
C1		-	-	-	-	-	-	-	305	305	305	305	460	460	460
Weight Kg	RF	21	28	36	53	60	84	139	201	320	430	548	744	1117	1466
	BW	18	21	30	44	54	76	126	179	303	398	509	710	1077	1426
	RF+BG	-	-	-	-	-	-	161	223	342	450	568	774	1147	1496
	BW+BG	-	-	-	-	-	-	148	201	325	418	529	740	1107	1456

GATE VALVES CLASS 300

SIZE		2"	2 1/2"	3"	4"	5"	6"	8"	10"	12"	14"	16"	18"	20"	24"
A (RF)		216	241	282	305	381	403	419	457	502	762	838	914	991	1143
A (BW)		216	241	282	305	381	403	419	457	502	762	838	914	991	1143
A (RTJ)		232	257	298	320	397	419	435	473	517	778	854	930	1010	1165
B (Open)		430	525	555	620	790	805	1005	1230	1465	1575	1758	1974	2167	2637
C		200	200	250	250	350	350	400	450	500	640	640	680	760	900
G		-	-	-	-	-	-	-	220	267	360	360	360	411	411
B1		-	-	-	-	-	-	-	1272	1479	1630	1815	2011	2225	2667
C1		-	-	-	-	-	-	-	305	460	460	460	540	540	610
Weight Kg	RF	28	36	51	78	107	144	228	320	450	694	1080	1235	1655	2320
	BW	22	27	40	60	86	113	183	254	358	576	935	1054	1433	1964
	RF+BG	-	-	-	-	-	166	250	342	480	857	1172	1483	1851	2634
	BW+BG	-	-	-	-	-	135	205	276	388	739	1027	1302	1629	2278

GATE VALVES CLASS 600

SIZE		2"	2 1/2"	3"	4"	5"	6"	8"	10"	12"	14"	16"	18"	20"	24"
A (RF)		292	330	356	432	508	559	660	787	-	-	-	-	-	-
A (BW)		292	330	356	432	508	559	660	787	-	-	-	-	-	-
A (RTJ)		295	333	359	436	511	562	663	790	-	-	-	-	-	-
B (Open)		465	532	555	685	795	910	1145	1268	-	-	-	-	-	-
C		250	250	250	350	400	450	500	600	-	-	-	-	-	-
G		-	-	-	-	-	-	260	320	-	-	-	-	-	-
B1		-	-	-	-	-	-	1175	1330	-	-	-	-	-	-
C1		-	-	-	-	-	-	460	610	-	-	-	-	-	-
Weight Kg	RF	41	57	72	128	200	266	419	754	-	-	-	-	-	-
	BW	34	47	58	99	155	209	336	616	-	-	-	-	-	-
	RF+BG	-	-	-	-	-	288	449	804	-	-	-	-	-	-
	BW+BG	-	-	-	-	-	231	366	666	-	-	-	-	-	-
										-	-	-	-	-	-

Forged Steel Gate Valves Class 800

F/V Forged Steel Gate Valves are available in bolted or welded bonnet designs with bolted bonnet valves having spiral wound gaskets made of Stainless Steel/Graphite.

Gate Valve Design and Specifications:

F/V Forged Steel Gate Valves conform to API 602, BS5352 and ASME B 16.34. Each valve is inspected and tested in accordance with API 598, and marked per MSS SP25.

Construction:

- *Stem seal consists of flexible graphite packing with anti-extrusion rings for optimumsealing*
- *Two pieceself aligning packinggland*
- *Handwheels or chain wheels are available as anoption*
- *Conventional port or full port*
- *Socket Weld Ends to ASME B16.11*
- *Threaded Ends to ANSI/ASMEB.1.20.1*
- *Handwheel is rugged with knobs to provide positivegrip*
- *Full range of actuators and accessories to meet automationrequirements*
- *Available in carbon, stainless steel and othermaterials*

Forged Steel Gate Valves
Conventional Port, Welded Bonnet, OS&Y, Socket Weld Ends- Class800

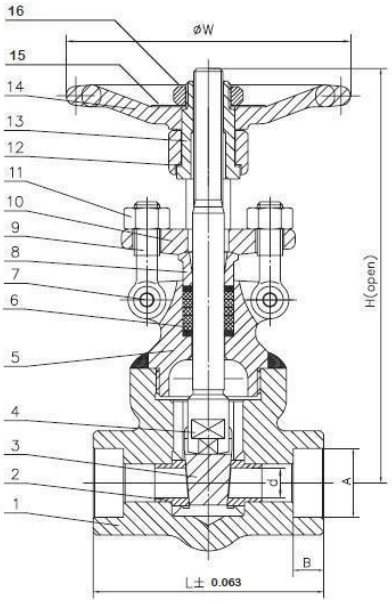

Valve Size	Dimensions					
	L	A	B	W	H	d
1/4"	2.87	0.56	0.38	3.94	5.71	0.37
3/8"	2.87	0.69	0.38	3.94	5.71	0.37
1/2"	2.87	0.86	0.38	3.94	5.71	0.37
3/4"	3.15	1.07	0.50	3.94	6.02	0.51
1"	3.94	1.33	0.50	4.92	7.20	0.69
1 1/4"	4.49	1.68	0.50	6.30	8.46	0.94
1 1/2"	4.72	1.92	0.50	6.30	9.21	1.14
2"	5.12	2.41	0.63	6.30	10.39	1.44

No.	Name	Material
1	Body	ASTM A105N
2	Seat	ASTM A276 410+STL
3	Wedge	ASTM A276 420/ ASTM A182 F6a+STL
4	Stem	ASTM A182 F6a
5	Bonnet	ASTM A105N
6	Packing	Flexible Graphite
7	Pin	ASTM A276 304
8	Gland	ASTM A276 420
9	Eye bolt	ASTM A193 B7
10	Gland flange	ASTM A105N
11	Nut	ASTM A194 2H
12	Gasket	SS304
13	Stem Nut	ASTM A276 410
14	Hand wheel	ASTM A197
15	Nameplate	ASTM A216 WCB
16	Hand wheel Nut	ASTM A197

Technical Requirements

1. Design & manufacture conform to API602
2. Test & inspect conform to API598
3. Face to Face dimension conform to manufacturer'sstandard
4. SW ends conform to ASMEB16.11

STANDARD MATERIAL FOR BOLTED BONNET GLOBE VALVES

POS.	PART NAME		MATERIAL			
			WCB-13%Cr Trim 8	LCC-13%Cr Trim 8	WC6-13%Cr Trim 8	CF8M-F316 Trim 12
1	- BODY		ASTM A216 WCB	ASTM A352 LCC	ASTM A217 WC6	ASTM A351 CF3
2	- SEAT RING		ASTM A105 HF	A182 F304 HF	A182 F304 HF	A182 F316 HF
3	- DISC		A216 WCB+13% Cr 1)	A350 LF2+13% Cr	A182F11 +13% Cr	ASTM A182 F316
4	- DISC THRUST PLATE		ASTM A182 F6			ASTM A182 F316
5	- DISC STEM NUT		ASTM A182 F316			ASTM A182 F316
6	– STEM		ASTM A182 F316			ASTM A182 F304L
7	- B/B GASKET	cl. 150	Corrugated S.S. Graphite			
		cl. 300	Spiral Wound Graphite			
		cl. 600	Soft Iron	ASTM A182 F316		
8	- BONNET		ASTM A216 WCB	ASTM A352 LCC	ASTM A217 WC6	ASTM A351 CF3
9	- BACK SEAT		ASTM A182 F6			ASTM A182 F316
10	- PACKING		Braided & Flexible Graphite			
11	- NUT FOR BOLTS		ASTM A194 2H	ASTM A194 Gr.4	ASTM A194 Gr.4	ASTM A194Gr. 8
12	- BODY BONNET BOLTS		ASTM A193 B7	ASTM A320 L7	ASTM A193 B16	ASTM A182 B8
13	- EYE BOLT PIN		CARBON STEEL			ASTM A182 F316
14	- PACKING GLAND		ASTM A182 F6			ASTM A351 CF3
15	- GLAND STUDS		ASTM A193 B7			ASTM A194 Gr.8
16	- GLAND FLANGE		ASTM A216 WCB			ASTM A351 CF8M
17	- EYE BOLT NUT		ASTM A194 2H			ASTM A194 Gr.8
18	- YOKE SLEEVE		ASTM A439 D2			
19	- SCREWED PIN		CARBON STEEL			
20	- HANDWHEEL		Ductile Iron			
22	- HANDWHEEL NUT		CARBON STEEL			

Note:
1) Disc: ASTM A105+STL

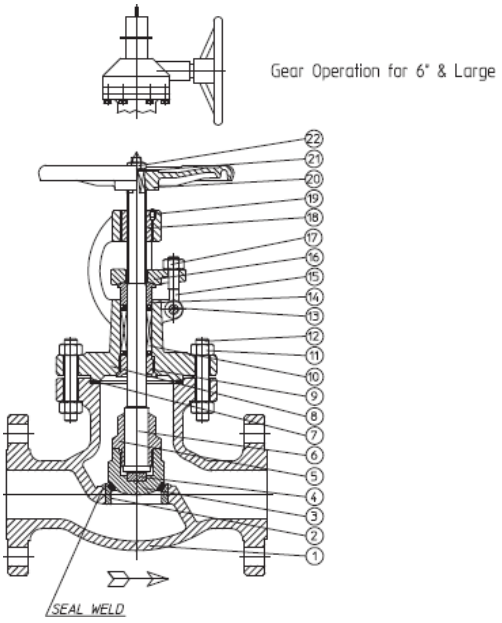

APJ ENERGY

GLOBE VALVES CLASS 150

SIZE		2"	2 1/2"	3"	4"	5"	6"	8"	10"	12"
A (RF)		203	216	241	292	356	406	495	622	698
A (BW)		203	216	241	292	356	406	495	622	698
A (RTJ)		216	229	254	305	368	419	508	635	711
B (Open)		356	420	411	475	540	550	615	749	922
C		200	250	250	300	350	400	450	450	640
G		-	-	-	-	-	-	360	360	360
B1		-	-	-	-	-	-	557	669	860
C1		-	-	-	-	-	-	460	460	460
Weight Kg	RF	21	30	37	57	78	100	156	261	308
	BW	17	22	29	46	67	86	134	227	272
	RF+BG	-	-	-	-	-	122	161	308	445
	BW+BG	-	-	-	-	-	108	159	274	409

GLOBE VALVES CLASS 300

SIZE		2"	2 1/2"	3"	4"	5"	6"	8"	10"	-
A (RF)		267	292	318	356	400	444	559	622	-
A (BW)		267	292	318	356	400	444	559	622	-
A (RTJ)		282	308	333	371	416	460	575	638	-
B (Open)		384	460	450	515	570	618	740	1049	-
C		200	250	300	350	400	450	500	610	-
G		-	-	-	-	-	-	460	610	-
B1		-	-	-	-	-	-	770	1078	-
C1		-	-	-	-	-	-	360	411	-
Weight Kg	RF	31	44	55	84	110	150	225	385	-
	BW	25	35	46	76	99	119	180	329	-
	RF+BG	-	-	77	100	-	172	255	600	-
	BW+BG	-	-	68	98	-	141	210	534	-

GLOBE VALVES CLASS 600

SIZE		2"	2 1/2"	3"	4"	5"	6"	8"	-	-
A (RF)		292	330	356	432	508	559	660	-	-
A (BW)		292	330	356	432	508	559	660	-	-
A (RTJ)		295	333	359	435	511	562	663	-	-
B (Open)		453	546	563	658	715	788	-	-	-
C		250	300	350	400	500	560	-	-	-
G		-	-	-	-	-	-	413	-	-
B1		-	-	-	-	-	-	940	-	-
C1		-	-	-	-	-	-	610	-	-
Weight Kg	RF	45	64	78	135	212	327	-	-	-
	BW	38	54	64	106	157	261	-	-	-
	RF+BG	-	-	-	157	-	417	542	-	-
	BW+BG	-	-	-	128	-	360	459	-	-
									-	-

APJ ENERGY

STANDARD MATERIAL FOR BOLTED BONNET SWING CHECK VALVES

POS.	PART NAME		MATERIAL			
			WCB-13%Cr Trim 8	LCC-13%Cr Trim 8	WC6-13%Cr Trim 8	CF8M-F316 Trim 12
1	- BODY		ASTM A216 WCB	ASTM A352 LCC	ASTM A217 WC6	ASTM A351 CF8M
2	- SEAT RING		ASTM A105 HF	A182 F304 HF	A182 F304 HF	A182 F316 HF
3	- DISC		A216 WCB+13% Cr	A350 LF2+13% Cr	A182 F11+13% Cr	ASTM A182 F316
4	- HINGE		ASTM A216 WCB	ASTM A352 LCC	ASTM A217 WC6	ASTM A351 CF8M
5	- WASHER		Carbon Steel		ASTM A182 F304	ASTM A182 F316
6	- DISC NUT		STAINLESS STEEL			
7	- PIN		STAINLESS STEEL			
8	- HINGE PIN		ASTM A182 F6			ASTM A182 F316
9	- YOKE		ASTM A216 WCB	ASTM A352 LCC	ASTM A217 WC6	ASTM A351 CF8M
10	- HINGE BOLT		ASTM A182 F304			ASTM A182 F316
11	- WASHER		CARBON STEEL			STAINLESS STEEL
12	- SPRING WASHER		CARBON STEEL			STAINLESS STEEL
13	- BODY BONNET BOLTS		ASTM A193 B7	ASTM A320 L7	ASTM A193 B16	ASTM A193 B8
14	- B/B GASKET	cl. 150	Corrugated S.S. Graphite			
		cl. 300	Spiral Wound Graphite			
		cl. 600	Soft Iron	ASTM A182 F316		
15	- BONNET		ASTM A216 WCB	ASTM A352 LCC	ASTM A217 WC6	ASTM A351 CF8M
16	- NUT FOR BOLTS		ASTM A194 2H	ASTM A194 Gr.4	ASTM A194 Gr.4	ASTM A194 Gr.8
17[1]	- EYE BOLT		CARBON STEEL			

.

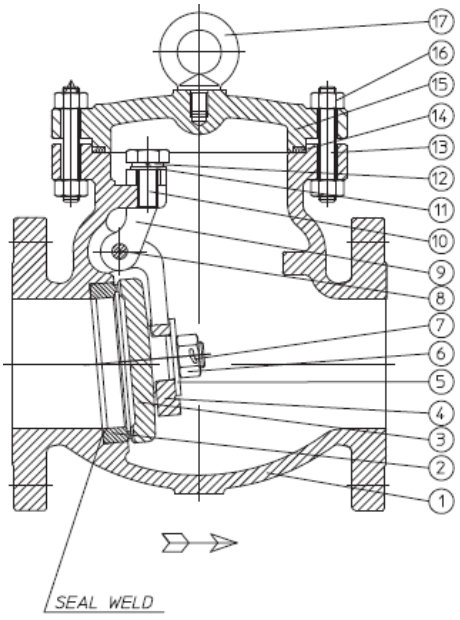

ENGINEERING SPECIFICATIONS

BYPASS & DRAIN CONNECTION

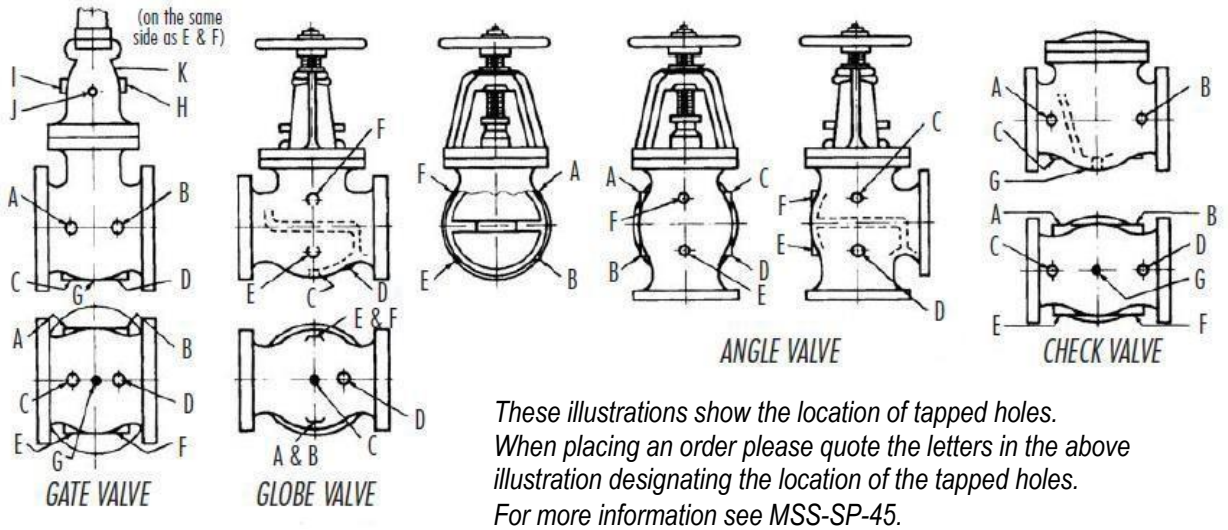

These illustrations show the location of tapped holes.
When placing an order please quote the letters in the above illustration designating the location of the tapped holes.
For more information see MSS-SP-45.

DRAIN & BYPASS DIMENSIONS

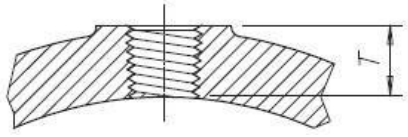

Thread for Connection Pipe

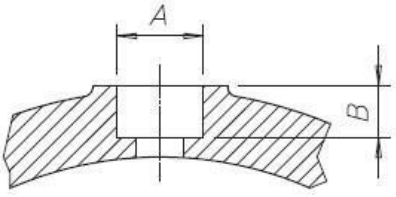

Thread for Connection Pipe

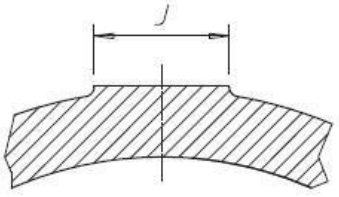

Bosses for Connections

VALVE SIZE	2" to 4"	5" to 8"	10" to 24"
Size of topping	1/2"	3/4"	1"
Lengthofthread T	14	14	18
Minimum diameter of socket A	22	27	34
Minimum depth of socket B	5	6.5	6.5
Diameterofboss J	38	44	54

All dimensions given in inches

AGR Forge valves can be equipped with by-passes which permit equalization of pressure on both sides of the valve. Unless otherwise specified the by-pass arrangement will be furnished on the side of the main valve. By-passes of other types can be made to order. Inquiries should give complete description or drawings.

By-pass valves are "AGR Forge" forged steel bolted-bonnet, outside screw and yoke, socket-weld end globe valves, and materials are suitable for the same service as the main valve.

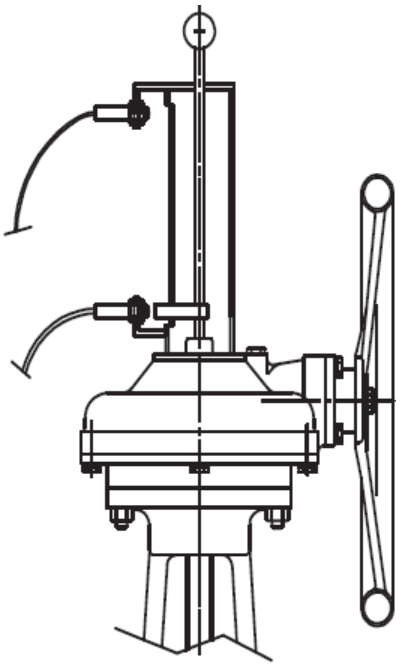

Limit Switches in Open and closePosition

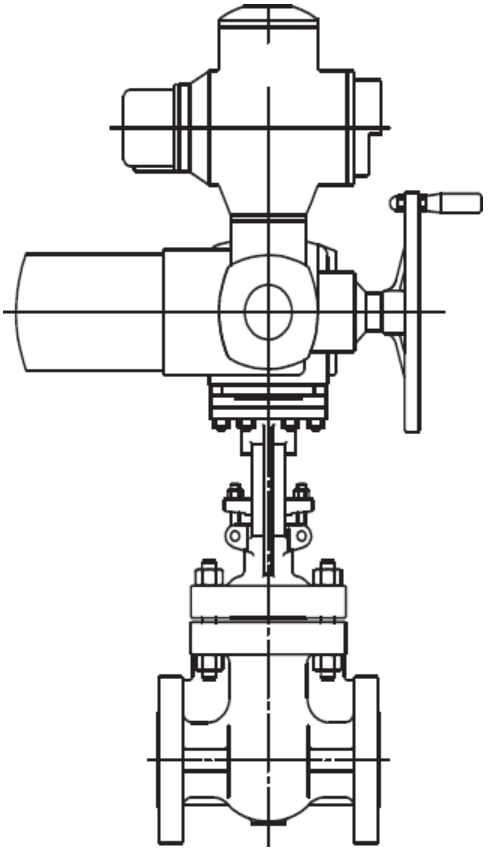

ELECTRIC ACTUATOR

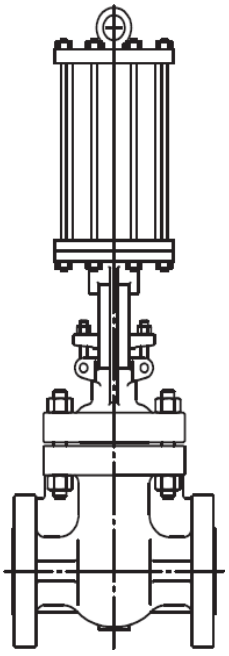

HYDRAULIC OR PNEUMATIC ACTUATOR

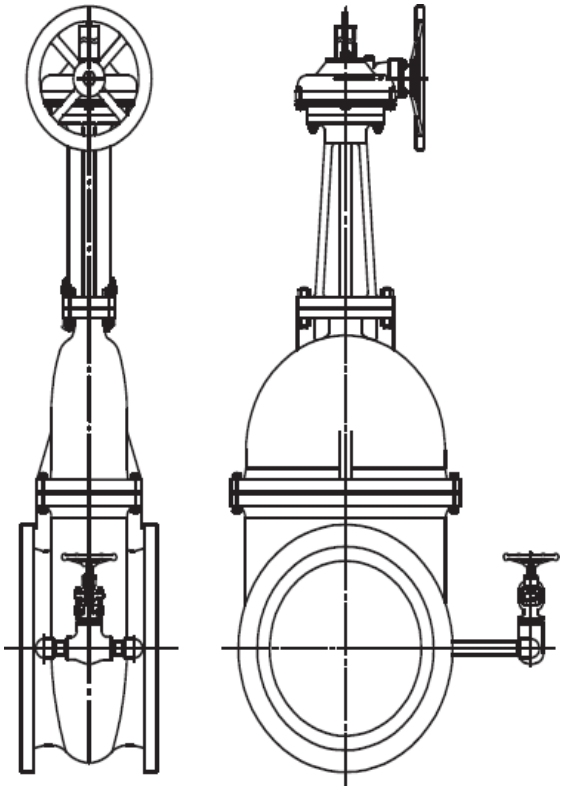

BYPASSAPPLICATION

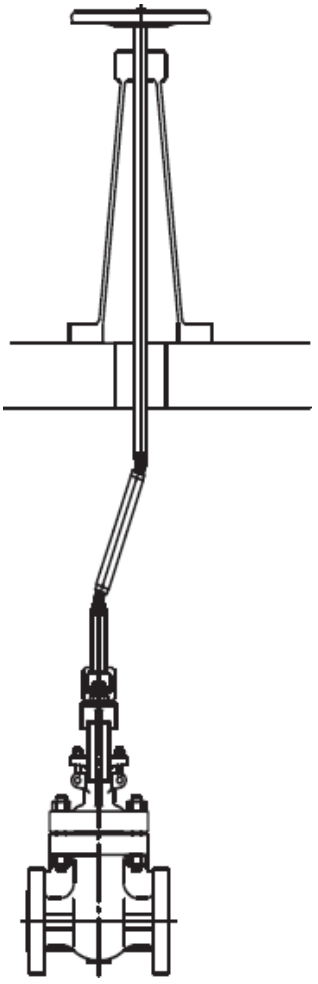

FLOOR STANDOPERATION

For Plug Valve

Pattern

Full Bore Plug Valves haveAPI-6D face to face dimensions and a round port that is not smaller than the minimum diameter specified in Annex A of ASME B16.34 or/and API 6D. This configuration provides unrestricted flow and allows the passage of pigs through the valve. It is recommended for highly abrasive services and low pressure drop as well.
Applicable Standard-Specification

Lubricated Plug Valves are designed to use with most refining and gas pipelines services according to API 599 or BS 5353 norms whichever applicable. API 6D norm aims to standardize the materials as well as instructions to manufacture valves suitable for energy transportation in the pipelines.

API 6A	*Specification for wellhead and Christmas tree equipment.*
API 6D	*Specification for Pipeline Valves.*
API 6FA	*Specification for Fire Test for Valves.*
API RP6F	*Recommended - Practice for Fire Test for Valves.*
API 598	*Valve Inspection and Testing.*
API 599	*Steel Plug Valves Flanged or ButtWelding Ends.*
ASME/ANSI B 16.5	*Pipe Flanges and Flanged Fittings.*
ASME/ANSI B 16.10	*Face-to-Face and End-to-End Dimensions of Valves.*
ASME/ANSI B 16.25	*Buttwelding Ends.*
ASME/ANSI B 16.34	*Valves-Flanged, threated and Welding Ends.*
ASME/ANSI B 31.3	*Chemical Plant and Petroleum Refinery Piping.*
ASME/ANSI B 31.4	*Liquid Transportation System for Liquid Petroleum Gas.*
ASME/ANSI B 31.8	*Gas Transmission and Distribution Piping System.*
ASME Section VIII	*Rules for Construction of Pressure Vessels.*
ASME Section V	*Nondestructive Examination.*
ASME Section II	*Materials.*
ASNT-TC-1A	*Recommended Practice for Personnel Qualification and Certification in Non destructive Testing.*
NACE Std. MR 01.75	*National Association of Latest Edition Corrosion Engineers.*
BS 1504	*Specification for Steel Casting for Pressure Purposes.*
BS 2080	*Face to Face - Centre to Face- Ed to End - Steel Valves.*
BS 5353	*Specification for Steel Plug Valves.*
BS 6755 part 1	*Testing of Valves (Spec. for Production Pressure Testing Requirements).*
BS 6755 part 2	*Testing of valves (Spec. for Fire Safe Testing Requirements).*
CSA Z 245. 15	*Canadian Standard Association.*
MSS-SP6	*Standard Finish for contact Face of Pipe Flanges.*
MSS-SP25	*Standard Marking System for Valves.*
MSS-SP44	*Steel Pipe Line Flanges.*
ASTM	*American Society for Testing and Materials.*

Standard Design Categories & Materials Section:

Trim materials are designed according to the service conditions.

1. Standard Carbon Steel Body and Plug. (ASTM-A216 WCB/WCC material) suitable for generalservices.
2. Carbon Steel Body and Plug (A352 LCB/LCC material) suitable for low temperatureservices.
3. Carbon Steel Body and Plug (ASTM A216WCB/WCC material) suitable for "SOUR SERVICE"(H2S and CO2) according to NACE-MR.01.75/LatestEdition.
4. Special Austenitic (6MO) and Ferritic-Austenitic Stainless Steel (Duplex and Superduplex) suitable for sea water and corrosiveservices.
5. Nickel-Chromium-Iron alloy (i.e. Alloy 20), Titanium & Titanium alloy, carbon steel with Inconel 625 cladding and stellite or Tungsten carbide hardfacing for abrasive/corrosiveservice.

6. Other materials upon request.

Trim Service	Class	Body/Cover	Plug	Stem and Oldham Coupler	Bolting
Standard service Natural gas Hydrocarbons	1500 to 2500	ASTM A 105	ASTM A105	ASTM 29 Gr. 4140	ASTM A193-B7M
		ASTM A216	ASTM A216		ASTM A194-2HM
		WCB/WCC	WCB/WCC		/
		Max C 0.25%	/		/
Low temperature Natural gas Hydrocarbons	150 to 2500	ASTM A350-LF2	ASTM A350-LF2	ASTM A29 Gr. 4140	ASTM A320-L7
		ASTM A352 -LCB/LCC	ASTM A352-LBC/LCC		ASTM A194 Gr.7
					/
		Max C 0.23%	/		/
Sour Service (H_2S and CO_2) Hydrocarbons	150 to 2500	ASTM A 105	ASTM A 105	ASTM A29 Gr. 4140 Max HRC22	ASTM A193-B7M
		ASTM A216 WCB/WCC	ASTM A216 WCB/WCC		ASTM A194-2HM
					Max. HRC22
		Max C 0.23%	Max C 0.23%		
		Max HRC22	Max HRC22		
Abrasive/Corrosive Slurry service	150 to 2500	ASTM B348 Gr 3 or5 (Titanium)	ASTM B348 Gr. 3 or 5	UNS S31254 UNS S32760	ASTM A453 Cr. 660A
		UNS N08020 ASTM A351 CN7M (Alloy 20)	UNS N08020 ASTM A351 CN7M	UNS S32750 UNS S32760	ASTM A453 Cr. 660A UNS S32760
		ASTM A105		ASTM A29 Gr 4140	ASTM A193 B7M ASTM A194 2HM
		ASTM A216 WCB/WCC			
		Hardfacing (Stellite/WC) and Cladding (Inconel 625)			

Pressure Test Tables in accordance with

ASME B16.34 Group Material 1.1 (A 105; A 216 WCB; A 350 LF2)

Working Pressures by Classes, psig (Bar)						
	150 PN20	300 PN50	600 PN100	900 PN150	1500 PN250	2500 PN420
Working pressure rating	285 (20)	740 (51)	1480 (102)	2220 (153)	3705 (255)	6170 (425)
Hydraulic body test	450 (31)	1125 (78)	2225 (153)	3350 (231)	5575 (384)	9275 (640)
Hydraulic seattest	314 (22)	814 (56)	1628 (112)	2442 (168)	4076 (281)	6787 (468)

ASME B16.34 Group Material 1.2 and 2.8

(A 350 LF6; A 216 WCC; A 352 LCC; A 182 F44/ F51; UNS S31803/S31254/S32750; A 351 Gr. CK3MCuN / CE8MN / CD4MCu / CD3MWCuN)

Working Pressures by Classes, psig (Bar)						
	150 PN20	300 PN50	600 PN100	900 PN150	1500 PN250	2500 PN420
Working pressure rating	290 (20)	750 (52)	1500 (103)	2250 (155)	3750 (259)	6250 (431)
Hydraulic body test	450 (31)	1125 (78)	2250 (155)	3375 (233)	5625 (388)	9375 (646)
Hydraulic seat test	319(22)	825(57)	1650(114)	2475(171)	4125(284)	6875(474)

ASME B16.34 Group Material 1.3 (A 352 LCB)

Working Pressures by Classes, psig (Bar)						
	150 PN20	**300 PN50**	**600 PN100**	**900 PN150**	**1500 PN250**	**2500 PN420**
Working pressure rating	265 (18)	695 (48)	1390 (96)	2085 (144)	3470 (239)	5785 (399)
Hydraulic body test	400 (28)	1050 (72)	2100 (145)	3150 (217)	5225 (360)	8700 (600)
Hydraulic seat test	292 (20)	765 (53)	1529 (105)	2294 (158)	3817 (263)	6364 (439)

ASME B16.34 Group Material 2.1 and 2.2 *(A 182 F304; A 479 Gr.304; A 351 CF3; A 351 CF8; A 182 F316; A 479 Gr.316; A 351 CF3M)*

Working Pressures by Classes, psig (Bar)						
	150 PN20	***300 PN50***	***600 PN100***	***900 PN150***	***1500 PN250***	***2500 PN420***
Working pressure rating	*275 (19)*	*720 (50)*	*1440 (99)*	*2160 (149)*	*3600 (248)*	*6000 (414)*
Hydraulic body test	*425 (29)*	*1100 (76)*	*2175 (150)*	*3250 (224)*	*5400 (372)*	*9000 (621)*
Hydraulic seat test	*303 (21)*	*792 (55)*	*1584 (109)*	*2376 (164)*	*3960 (273)*	*6600 (455)*

ASME B16.34 Group Material 2.3 *(A 182 F304/F316L; A 479 Gr.304/316L)*

Working Pressures by Classes, psig (Bar)						
	150 PN 20	*300 PN50*	*600 PN100*	*900 PN150*	*1500 PN250*	*2500 PN420*
Working pressure rating	*230 (16)*	*600 (41)*	*1200 (83)*	*1800 (124)*	*3000 (207)*	*5000 (345)*
Hydraulic body test	*350 (24)*	*900 (62)*	*1800 (124)*	*2700 (186)*	*4500 (310)*	*7500 (517)*
Hydraulic seat test	*253 (17)*	*660 (46)*	*1320 (91)*	*1980 (137)*	*3300 (228)*	*5500 (379)*

Pressure Test Tables in accordance with API 6A

Working Pressure Rating		***Hydraulic Pressure Test Body*** *Up to13 5/8"*		***Hydraulic Pressure Test Body*** *From 16 3/4"*		***Seat***		***High Pressure Gas Test Body & Seat***	
Bar	*psi*	***Bar***	*psi*	***Bar***	*psi*	***Bar***	*psi*	*Bar*	*psi*
138	*2000*	***276***	*4000*	***207***	*3000*	***138***	*2000*	*138*	*2000*
207	*3000*	***415***	*6000*	***310***	*4500*	***207***	*3000*	*207*	*3000*
345	*5000*	***517***	*7500*	***517***	*7500*	***345***	*5000*	*345*	*5000*
690	*10000*	***1035***	*15000*	***1035***	*15000*	***690***	*10000*	*690*	*10000*
1.035	*15000*	***1550***	*22500*	***1550***	*22500*	***1035***	*15000*	*1035*	*15000*
1.380	*20000*	***2070***	*30000*	*/*	*/*	***1380***	*20000*	*1380*	*20000*

PLUG VALVES

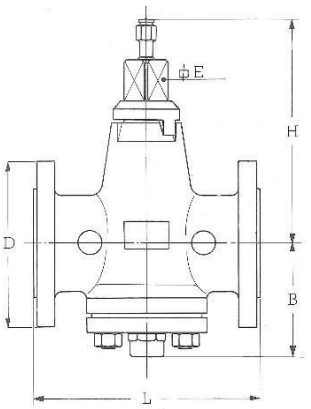

ANSI 150Steel Plug Valves Short Pattern Wrench - Operated

Size	Inch	1 ½"	2"	2 1/2"	3"	4"	6"
DN	mm	40	50	65	80	100	150
L Butt Welding	mm	-	267	305	330	356	457
L Flange Raised Face	mm	165	178	190	203	229	267
D	mm	127	152	178	191	229	280
B	mm	120	130	150	170	190	235
H	mm	270	290	320	360	380	460
E	mm	40	45	50	50	50	65
Sectional area of flow	%	50	50	50	50	50	50
Weight (approx.)	Kg	15	20	30	40	60	110

Note: Valves from 3" size have the Flanges with some Holes Threaded UNC.

ANSI 300Steel Plug Valves Short Pattern Wrench - Operated

Size	Inch	1 ½"	2"	2 1/2"	3"	4"	6"
DN	mm	40	50	65	80	100	150
L Butt Welding	mm	-	267	-	330	356	457
L Flange Raised Face	mm	190	216	241	283	305	403
L Flange Ring Joint	mm	203	232	257	299	321	419
D	mm	156	165	191	210	254	318
B	mm	120	130	150	170	190	235
H	mm	270	290	320	360	380	460
E	mm	40	45	50	50	50	65
Plug port area	%	50	50	50	50	50	50
Weight (approx.)	Kg	20	25	35	50	80	150

ANSI 600Steel Plug Valves Regular Pattern Wrench - Operated

Size	Inch	½"	3/4"	1"	1 1/2"	2"	2 ½ "	3"	4"
DN	mm	15	20	25	40	50	65	80	100
L Butt Welding	mm	-	-	-	-	292	330	356	432
L Flange Raised Face	mm	159	191	216	241	292	330	356	432
L Flange Ring Joint	mm	159	191	216	241	295	333	359	435
D	mm	95	118	124	156	165	191	210	273
B	mm	90	100	100	125	136	150	165	185
H	mm	160	200	200	270	290	320	360	380
E	mm	22	27	27	40	45	50	50	50
Plug port area	%	100	100	100	80	80	60	60	60
Weight (approx.)	Kg	6	10	12	25	35	50	65	106

ANSI 900 Steel Plug Valves Regular Pattern Wrench - Operated

Size DN	**Inch** mm	**½"** 15	**3/4"** 20	**1"** 25	**1 1/4"** 32	**1 1/2"** 40	**2"** 50	**2 ½"** 65	**3"** 80	**4"** 100
L Butt Welding	mm	-	-	-	-	-	-	-	381	457
L Flange Raised Face	mm	222	248	254	279	305	368	419	381	457
L Flange Ring Joint	mm	222	248	254	279	305	371	422	384	460
D	mm	121	130	149	159	178	216	245	241	292
B	mm	100	100	100	120	130	150	160	170	200
H	mm	160	200	200	250	270	290	320	360	380
E	mm	22	27	27	35	40	45	50	50	50
Plug port area	%	100	100	100	80	80	80	60	60	60
Weight (approx.)	Kg	12	16	20	25	35	60	75	85	125

ANSI 1500 Steel Plug Valves Regular Pattern Wrench - Operated

Size	**Inch**	**½"**	**3/4"**	**1"**	**1 1/4"**	**1 1/2"**	**2"**	**2 ½"**	**3"**
DN	mm	15	20	25	32	40	50	65	80
L Butt Welding	mm	-	-	-	-	-	-	-	470
L Flange Raised Face	mm	222	247	254	279	305	368	419	470
L Flange Ring Joint	mm	222	247	254	279	305	371	422	473
D	mm	121	130	149	159	178	216	245	267
B	mm	100	100	100	120	130	150	160	170
H	mm	160	200	200	250	270	390	320	360
E	mm	22	27	27	35	40	45	50	50
Plug port area	%	100	100	100	80	80	60	60	60
Weight (approx.)	Kg	12	16	20	25	35	60	85	105

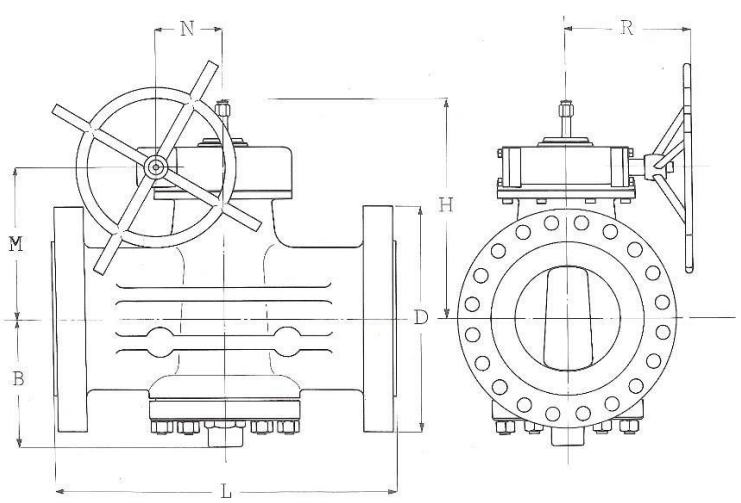

APJ ENERGY

ANSI 150Steel Plug Valves Short Pattern Gear - Operated

Size	Inch	6"	8"	10"	12"	14"	16"	18 "	20"	22"	24"	30"
DN	mm	150	200	250	300	350	400	450	500	550	600	750
L Butt Welding	mm	457	521	559	635	686	762	864	914	1030	1067	1397
L Flange Raised Face	mm	267	292	330	356	686	762	864	914	1030	106	1296
D	mm	280	343	406	483	534	597	635	699	750	813	984
B	mm	240	260	280	300	330	350	380	410	460	500	580
H	mm	480	510	530	550	600	620	640	700	750	800	900
M	mm	270	310	380	410	410	430	470	500	540	560	660
N	mm	120	120	150	170	170	190	220	220	230	230	260
R	mm	300	300	300	320	320	320	370	380	520	520	600
Handwheel diameter	mm	500	500	650	650	650	650	650	650	800	800	800
Plug port area	%	50	50	50	50	50	50	50	50	50	50	50
Weight (approx.)	Kg	140	180	240	365	480	700	880	1050	1500	2030	3000

ANSI 300Steel Plug Valves Short and Venturi Pattern Gear - Operated

Size	Inch	6"	8"	10"	12"	14"	16"	18 "	20"	22"	24"
DN	mm	150	200	250	300	350	400	450	500	550	600
L Butt Welding	mm	457	521	559	635	762	838	914	991	1092	1143
Flange Raised Face	mm	403	419	457	502	762	838	914	991	1092	1143
L Flange Raised Face	mm	419	435	473	518	778	854	930	1010	1114	1165
D	mm	318	381	445	521	584	648	711	775	838	915
B	mm	240	260	280	300	350	370	400	430	480	530
H	mm	500	530	550	570	620	640	700	750	820	900
M	mm	300	340	360	380	410	440	480	510	540	565
N	mm	150	150	150	170	190	190	220	230	230	260
R	mm	300	300	300	320	350	350	380	520	520	560
Handwheel diameter	mm	650	650	650	650	650	650	800	800	800	800
Plug port area	%	50	50	50	50	50	50	50	50	50	50
Weight (approx.)	Kg	200	260	300	400	650	800	1000	1200	1500	2200

SeeNote (1)

ANSI 600Steel Plug Valves Regular and Venturi Pattern Gear - Operated

Size	Inch	6"	8"	10"	12"	14"	16"	18 "	20"	22"	24"
DN	mm	150	200	250	300	350	400	450	500	550	600
L Butt Welding	mm	559	660	787	838	889	991	1092	1194	1296	1397
Flange Raised Face	mm	559	660	787	838	889	991	1092	1194	1296	1397
L Flange Raised Face	mm	562	663	790	841	892	994	1095	1200	1305	1407
D	mm	356	419	508	559	603	686	743	813	870	940
B	mm	240	260	280	300	350	370	400	430	480	530
H	mm	480	530	550	570	620	640	700	750	820	900
M	mm	270	340	360	380	410	460	495	530	570	600
N	mm	150	170	170	190	220	220	230	230	260	260
R	mm	300	320	320	350	350	370	520	520	560	560
Handwheel diameter	mm	650	650	650	650	650	650	800	800	800	800
Plug port area	%	60	60	60	60	60	60	60	60	60	60
Weight (approx.)	Kg	270	390	550	700	850	1100	1550	2000	2500	3200

NOTE (1) Venturi Pattern Plug Port Area =40%

ANSI 900 Steel Plug Valves Regular and Venturi Pattern Gear – Operated

Size	Inch	4″	6″	8″	10″	12″	14″	16″
DN	mm	100	150	250	250	300	350	400
L Butt Welding	mm	457	610	737	838	965	1028	1130
L Flange Raised Face	mm	457	610	737	838	965	1028	1130
L Flange Ring Joint	mm	460	613	740	841	968	1038	1140
D	mm	292	381	470	546	610	641	705
B	mm	200	250	300	320	350	365	380
H	mm	400	500	540	580	650	660	680
M	mm	250	300	350	370	470	450	480
N	mm	120	150	170	190	220	230	230
R	mm	250	300	330	350	370	520	520
Hand wheel – diameter	mm	500	600	650	650	800	800	800
Plug port area	%	60	60	60	60	60	60	60
Weight (approx.)	Kg	160	324	500	750	1500	1500	1700

Note (1) Venturi Pattern Plug Port Area=40%

ANSI 1500 Steel Plug Valves Regular and Venturi Pattern Gear – Operated

Size	Inch	3″	4″	6″	8″	10″	12″
DN	mm	80	100	150	200	250	300
L Butt Welding	mm	470	546	705	832	991	1130
L Flange Raised Face	mm	470	546	705	832	991	1130
L Flange Ring Joint	mm	473	549	711	842	1001	1146
D	mm	267	311	394	483	584	673
B	mm	170	200	520	300	360	450
H	mm	380	400	500	540	580	650
M	mm	220	240	300	350	380	460
N	mm	120	120	150	190	230	230
R	mm	250	250	300	350	520	520
Hand wheel – diameter	mm	500	500	650	650	800	800
Plug port area	%	60	60	60	60	60	60
Weight (approx.)	Kg	130	220	550	1100	1350	1900

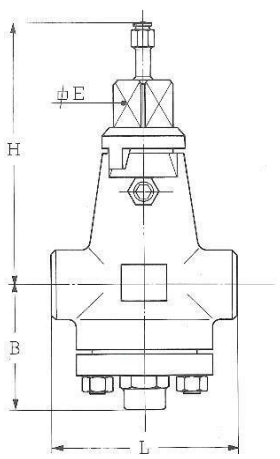

ANSI 600 Steel Plug Valves Screwed or Socket Weld Ends Wrench – Operated

Size	Inch	1/4″	3/8″	1/2″	3/4″	1″	1 ½″	2″
DN	mm	8	10	15	25	25	40	50
L	mm	89	89	89	114	133	187	229
H	mm	140	140	140	140	200	270	290
B	mm	90	90	90	95	100	120	130
E	mm	22	22	22	22	27	40	45
Plug port area	%	100	100	100	100	100	80	80
Weight (approx.)	Kg	4.5	4.5	4.5	4.5	8	18	25

ANSI 800 Steel Plug Valves Screwed or Socket Weld Ends Wrench – Operated

Size	Inch	1/4″	3/8″	1/2″	3/4″	1″	1 1/2″	2″
DN	mm	8	10	15	25	25	40	50
L	mm	89	89	89	114	133	187	229
H	mm	140	140	140	140	200	270	290
B	mm	90	90	90	95	100	120	130
E	mm	22	22	22	22	27	40	45
Plug port area	%	100	100	100	100	100	80	80
Weight (approx.)	Kg	4.5	4.5	4.5	4.5	8	18	25

ANSI 1500 Steel Plug Valves Screwed or Socket Weld Ends Wrench – Operated

Size	Inch	3/8″	1/2″	3/4″	1″	1 1/2″	2″
DN	mm	10	15	25	25	40	50
L	mm	89	89	114	133	229	229
H	mm	140	140	140	200	270	290
B	mm	90	90	90	100	120	130
E	mm	22	22	22	27	40	45
Plug port area	%	100	100	100	100	80	80
Weight (approx.)	Kg	4.5	4.5	4.5	10	20	30

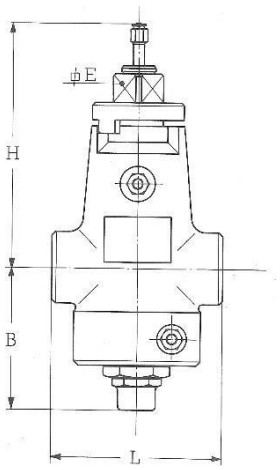

ANSI 2500 Steel Plug Valves Screwed or Socket Weld Ends Wrench – Operated

Size	Inch	1/2″	3/8″	1″
DN	mm	15	20	25
L	mm	133	133	133
B	mm	145	145	145
H	mm	230	230	230
E	mm	32	32	32
Plug port area	%	100	100	100
Weight (approx.)	Kg	15	16	15

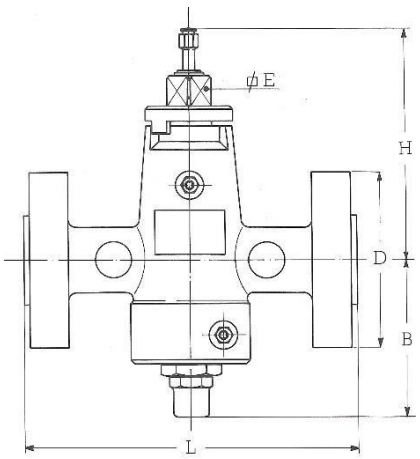

ANSI 2500 Steel Plug Valves Regular Pattern Wrench – Operated

Size	Inch	1″	1 1/2″	2″	2 1/2″
DN	mm	25	40	50	65
D	mm	159	203	235	267
L Flange Raised Face – BW	mm	308	384	451	508
L Flange Ring Joint	mm	308	387	454	514
B	mm	145	160	170	180
H	mm	230	230	250	280
E	mm	32	45	50	50
Plug port area	%	100	60	60	60
Weight (approx.)	Kg	30	65	80	110

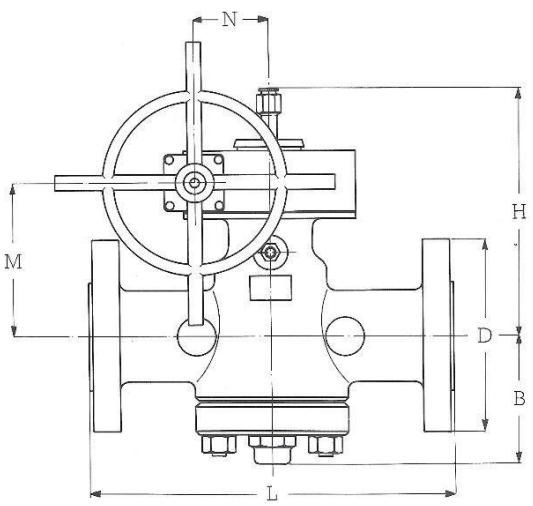

ANSI 2500 Steel Plug Valves Regular Pattern Gear – Operated

Size	Inch	3″	4″	6″	8″
DN	Mm	80	100	150	200
D	mm	305	356	483	552
L Flange Raised Face – BW	mm	578	673	914	1022
L Flange Ring Joint	mm	584	683	927	1038
B	mm	190	210	250	300
H	mm	400	420	460	500
M	mm	250	260	300	340
N	mm	120	150	170	190
Hand wheel – diameter	mm	500	650	800	800
Plug port area	%	60	60	60	60
Weight (approx.)	Kg	160	220	650	1200

APJ ENERGY

NDE EXAMINATIONS

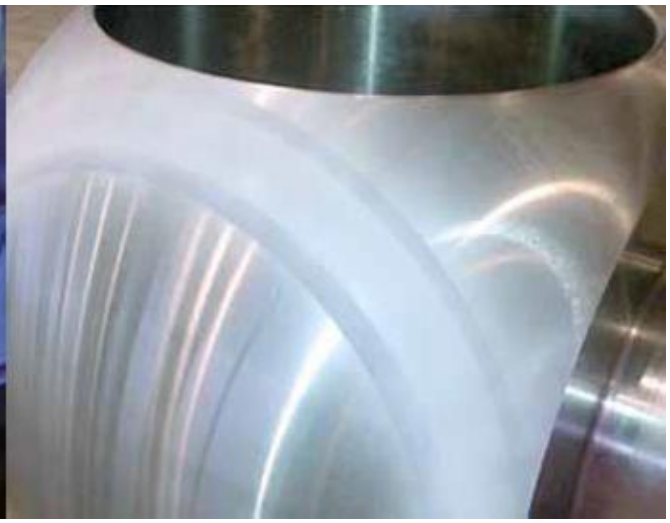

VOLUMETRIC EXAMINATIONS

RT

- ON WELDS
- ON CASTING (CRITICAL AREAS)

UT

- ON RAW MATERIAL OR PRE-MACHINED COMPONENTS
- ON WELDS

SUPERFICIAL EXAMINATIONS

VT

- APPLICABLE ON ALL MACHINED COMPONENTS AND WELDS

PT

- ON WELDS
- ON BEVEL ENDS
- ON FINISHED SURFACES
- APPLICABLE ON BOTH MAGNETIC AND NON

MT

SAME AS PT BUT APPLICABLE ON MAGNETIC METAL PARTS ONLY

PRESSURE TESTING

Pressure tests are carried out in accordance with customer's requirements. On/Off ball valves up to rating 2500# undergo API 6D or API 598.

- 100% Ball valves are tested:
- Hydrostatic body/seat test
- Pneumatic body test
- Visual and dimensional test
- Functional and operability test
- LP & HP gas test